M 81934/1 | Plain Series Aluminium Alloy | BPD--A--

Menu

P/N X-Ref | Materials | Clearance/Torque | Staking Groove | Limits & Fits | Keyways

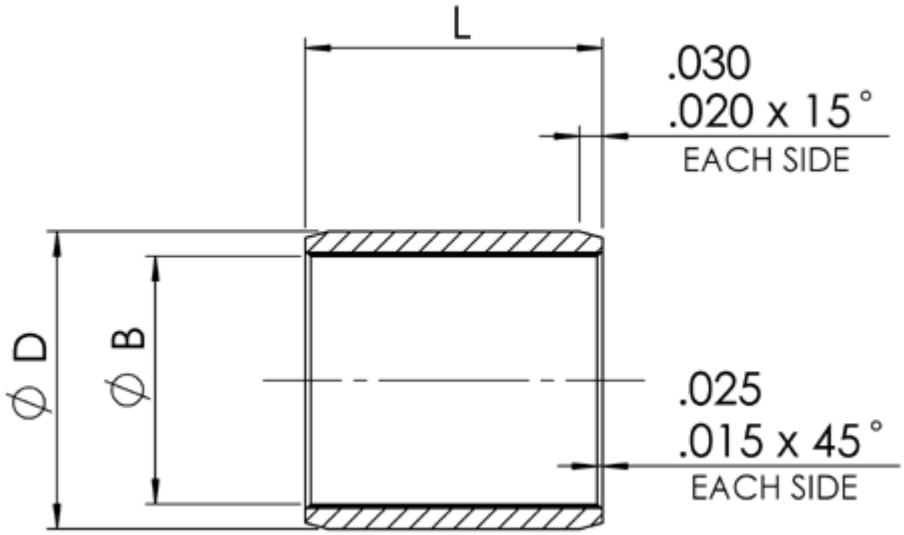

Bore Code	B +0 -.0010	D +0 -.0005	Length code L +0 -.010																																	
			05	06	07	08	09	10	11	12	14	16	18	20	22	24	28	32	36	40	44	48	52	56	60	64	68	72	76	80	88	96
			.156	.187	.218	.250	.281	.312	.343	.375	.437	.500	.562	.625	.687	.750	.875	1.000	1.125	1.250	1.375	1.500	1.625	1.750	1.875	2.000	2.125	2.250	2.375	2.500	2.750	3.00
04	.2515	.3760																														
05	.3140	.4386																														
06	.3765	.5012																														
07	.4390	.5638																														
08	.5015	.6265																														
09	.5640	.6892																														
10	.6265	.8142																														
11	.6890	.8767																														
12	.7515	.9393										Preferred sizes																			
14	.8765	1.0645																														
16	1.0015	1.1898																														
18	1.1265	1.3148																														
20	1.2515	1.4398																														
22	1.3765	1.5648																														
24	1.5015	1.7523																														
26	1.6265	1.8773																														
28	1.7515	2.0023																														
32	2.0015	2.2523																														

Dimensions in inches

Load Calculations
Static limit load = 50,000 x B x (L-1) lbf
Permissable dynamic load = 37,500 x B x (L-1) lbf
Where:
B = Bush bore
L = Bush length

Contact Details

Head Office | UK | Germany | France | Italy | Singapore | USA