EN 2286 | Flanged Series Aluminium | MLFD

Menu

P/N X-Ref | Materials | Clearance/Torque | Staking Groove | Limits & Fits | Keyways

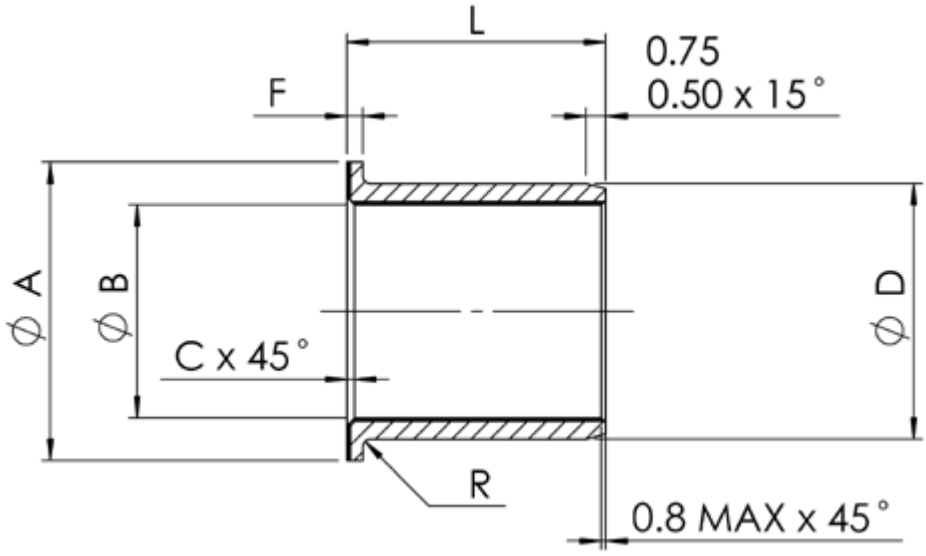

B		D		A	F	R	C	Length																
nom	tol	nom	tol p6	+0 -0.25	+0 -0.15		max	6	8	10	12	15	16	18	20	22	25	28	30	32	35	40	45	50
								$L^{-0.1}_{-0.4}$																
								Mass in kg/1000 pcs																
6	+0.022 +0.004	10	+0.024 -0.015	12	1.5	0.1 to 0.4	0.9	1.0																
8	+0.027 +0.005	12	+0.029 +0.018	14				1.3	1.6															
10		14		16				1.5	1.9	2.3														
12	+0.033 +0.006	16		22		0.5 to 0.8		2.3	2.7	3.2	3.7													
15		19	+0.035 +0.022	25					3.3	3.8	4.5	5.0												
16		20		26					3.4	4.1	4.7	5.7	6.0											
18		22		28			1.2			4.6	5.3	6.3		7.4										
20	+0.040 +0.007	25		30						5.9	6.9	8.4			11.0									
22		26		32							6.3	7.6			9.7	10.6								
25		30		35							8.4	10.3			13.3	14.5	16.4							
28		34	+0.042 +0.026	40	2.5							14.9			19.0	20.6	23.1	25.4						
30		36		42								15.8			20.3	22.0	24.6		29.1					
32	+0.048 +0.009	38		44								16.7			21.4	23.3	26.1		30.8	32.6				
35		42		47											26.5	28.9	32.5		38.5		44.5			
40		48	+0.051 +0.032	52											33.6		41.4		49.0		57.1	64.0		
45		52		57													40.8		48.3		56.0	63.5	71.0	
50		58		62													50.7		60.3		69.9	79.6	79.6	98.[illegible]

Dimensions in millimetres

Load Calculations

Static radial limit load = 0.206B x (L- 1.2 - Rmax - Fmax) kN

Static axial limit load = 0.16[(A-1.5)2 - (B+2.5)2] kN

Permissable dynamic load = Static radial limit load / 1.2 kN

Where:
B = Bush bore diameter
L = Bush length
R = Corner radius
F = Flange width
A = Flange diameter

Contact Details
Head Office | UK | Germany | France | Italy | Singapore | USA